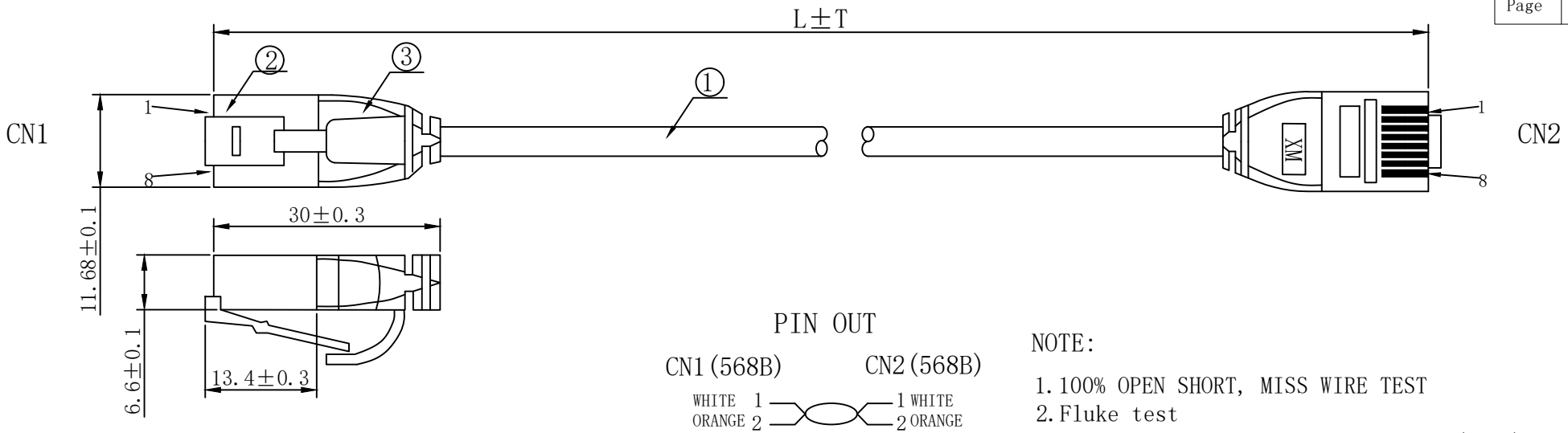

PIN OUT

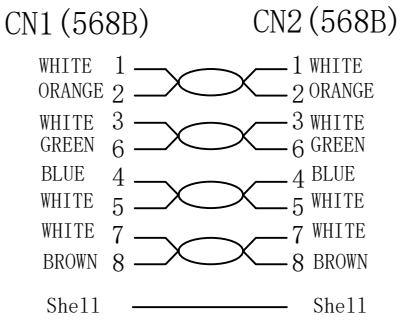

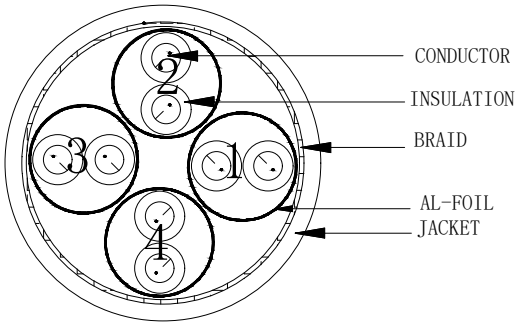

NOTE:

1. 100% OPEN SHORT, MISS WIRE TEST
2. Fluke test
TEST LIMIT:ISO11801 Channel Class I(+ALL)
3. RoHS and REACH Compliant
5. Working temperature:-10℃~+60℃
Storage temperature:-20℃~+75℃
6. Print word: Cat 8.1 S/FTP 4x2x28AWG/7 TPE-LSZH ISO/IEC11801 & EN50173 & ANSI/TIA568.2-D
7. Flame retardant (IEC60332-1-2)
Low smoke(IEC 61034)
Halogen free(IEC 60754-2)
8. Minimum of the bending radius is 6*ODmm(Suitable for all meters)
9. Support PoE per IEEE802.3af,PoE+ per IEEE802.3at, PoE++ per IEEE802.3bt

MATERIAL LIST

NO.	PARTS NAME	SPECIFICATION STANDARD	QT'Y	REMARK
③	OVER MOLD	75A PVC green(Pantone 3278C)	2	
②	CONNECTOR	RJ45 8P8C Shielded Plug,Pin Gold Plated 3U", The Shell plated nickel,black	2	
①	CABLE	S/FTP CAT.8 (AWG28 BC*1P+AL-FOIL)*4PAIRS+ BRAID+ JACKET:TPE-LSZH green(Pantone 3278C) OD:4.5±0.2mm	1	

ITEM NO.	DESC.	LENGTH
21.15.3435	ROLINE PatchCord S/FTP Cat.8.1, Slim, PoE, green	5000±100mm
21.15.3433	ROLINE PatchCord S/FTP Cat.8.1, Slim, PoE, green	3000±50mm
21.15.3432	ROLINE PatchCord S/FTP Cat.8.1, Slim, PoE, green	2000±30mm
21.15.3434	ROLINE PatchCord S/FTP Cat.8.1, Slim, PoE, green	1500±30mm
21.15.3431	ROLINE PatchCord S/FTP Cat.8.1, Slim, PoE, green	1000±25mm
21.15.3430	ROLINE PatchCord S/FTP Cat.8.1, Slim, PoE, green	500±25mm
21.15.3436	ROLINE PatchCord S/FTP Cat.8.1, Slim, PoE, green	300±25mm

BY	CHK	REVISION RECORD MODIFICATION	DATE	REV.
		NEW	2025-03-31	A

SECOMP