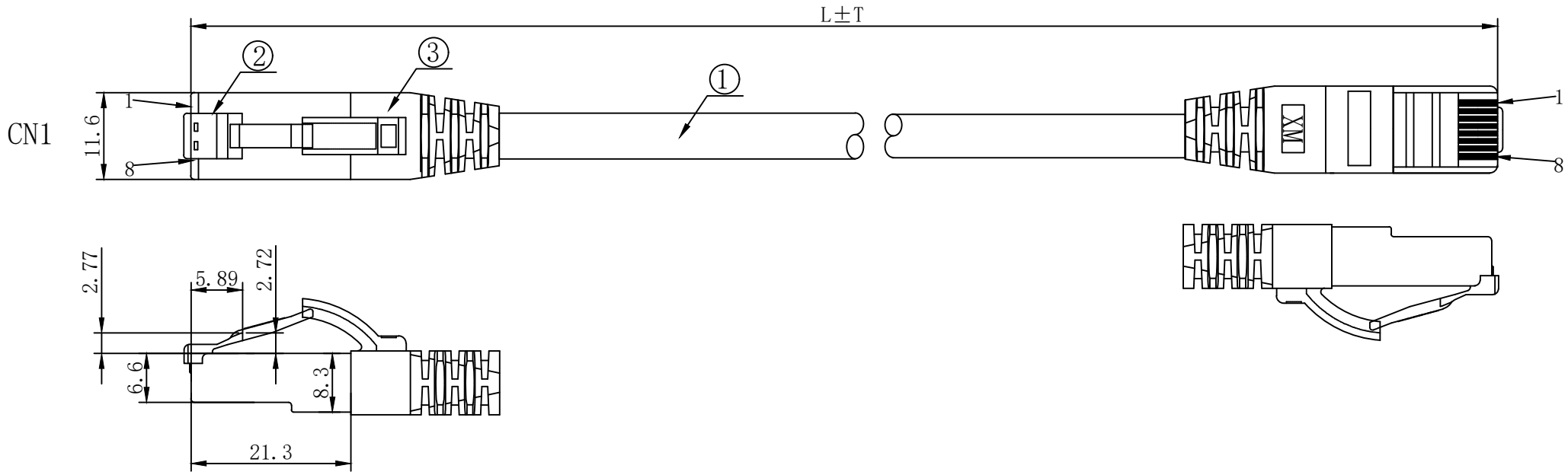

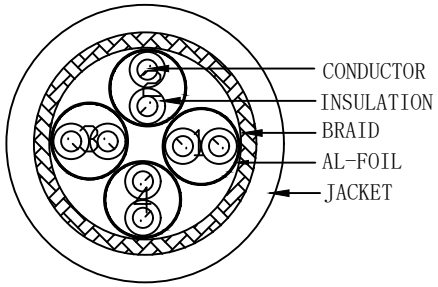

WIRING DIAGRAM

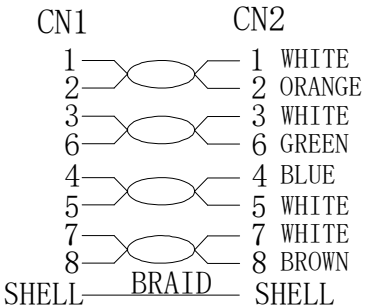

NOTE:

1. ELECTRICAL TEST:100% OPEN SHORT, MISS WIRE TEST
2. FLUKE Channel LINK TEST:TEST LIMIT:ISO11801 Channel Class EA
3. Working temperature:-10℃~+60℃
4. Storage temperature:-20℃~+75℃
5. RoHS2.0 and REACH compliant

Spray WORD:CAT6A S/FTP with 600MHz cat.7 raw cable 4x2x26AWG/7 TPE ISO11801 & EN50173 & ANSI/TIA568.2-D

6. Halogen-free (IEC60754-2)
7. Low smoke(IEC 61034)
8. Flame retardant (IEC60332-1-2)

MATERIAL LIST

NO.	PARTS NAME	SPECIFICATION STANDARD	QT'Y	REMARK
③	OVER MOLD	75A PVC	2	
②	CONNECTOR	RJ45 8P8C Shielded Plug,Pin Gold Plated 3u" Shell Nickel plating COLOUR: Transparence Yellow	2	
①	CABLE	S/FTP CAT.7 26AWG(BC*1P+AL-FOLL)*4PAIRS+BRAID(AL-MG) JACKET:TPE OD:6.0±0.2mm	1	

Color:Black 3C	
ITEM NO.	LENGTH
21.15.0750	500±20mm
21.15.0751	1000±20mm
21.15.0752	2000±30mm
21.15.0753	3000±50mm
21.15.0755	5000±100mm
21.15.0757	7000±150mm
21.15.0759	10000±300mm

BY	CHK	REVISION RECORD MODIFICATION	DATE	REV.
		NEW	2023-02-01	A

DESC. ROLINE Outdoor S/FTP PatchCord, Cat.6A/Class EA

SECOMP